Unitek

FEATURES

- 1/3" CMOS Image Sensor (Panasonic, 2.1 Mega Pixel)
- HD-SDI (1080p@25/30fps) video output
- ACE, 3D-DNR, HLC, DSS, WDR
- Day&Night function (ICR)
- Full OSD
- Defog
- RS-485 Interface

UH-BXHDTD

SPECIFICATIONS

VIDEO	
Image sensor	1/3" Panasonic CMOS, (2.1 Mega pixel)
Effective pixel	1,944(H) X 1,092(V)
Scanning system	Progressive scan
Resolution	Digital : 1,920 x 1,080p(1,080p/30fps), 1,280 x 720p(720p/60fps) Analog : 700TVL
S/N ratio	More than 50dB (AGC OFF)
Video output	HD-SDI Analog : NTSC, PAL(without WDR)
Min. Illumination	Color: 1.0Lux, BW: 0.5Lux Color DSS: 0.002Lux, BW DSS : 0.001Lux
LENS TYPE	
LENS TYPE	DC / Manual
Angle of view(Diagonal)	CS-Mount, (Option : C-Mount)
OPERATIONAL	
OSD	Yes
Day & Night	ICR (Auto / Day / Night / EXT)
Brightness	0 ~ 20 level
Shutter speed	Auto / Manual (1/30(1/25) ~ 1/60,000)
Flicker less	ON / OFF
DSS	OFF / x 2 / x 3 / x 4
AGC	ON / OFF
Backlight compensation	WDR / BLC / OFF
HLC	ON / OFF
ACE	ON / OFF
D.Compress	ON / OFF
White balance	Auto / One Push / Manual / Indoor / Outdoor
Sharpness	0 ~ 10 level
DNR(3D)	Auto / High / Middle / Low / Off
Digital zoom	ON / OFF (X 1 ~ X 32)
Freeze	ON / OFF
Motion detection	ON / OFF (4 Zone Selectable)
Privacy masking	ON / OFF (28 Zone Selectable)
Mirror	H / V / H&V / OFF
Defog	ON / OFF
MECHANICAL	
Dimension	59.8(W) X 63.8(H) X 109.4(D) mm
Weight	Approx. 300g
ENVIRONMENTAL	
Construction	Aluminum
Ingress Protection	N/A
Operation temp.	-45°C ~ +50°C
Humidity	0% to 90%
FUNCTION	
Protocol	PELCO-D , PELCO-P
Baud Rate	2,400 ~ 115,200bps
Communication	RS-485
ELECTRONICAL	
Supplied voltage	DC12V ±10% or AC24V±10% Dual voltage
Current consumption	Max. 300mA(at 12V DC, 24V AC)
Heater	Yes
Fan	N/A
CERTIFICATION	
CE, FCC, ROHS	Yes
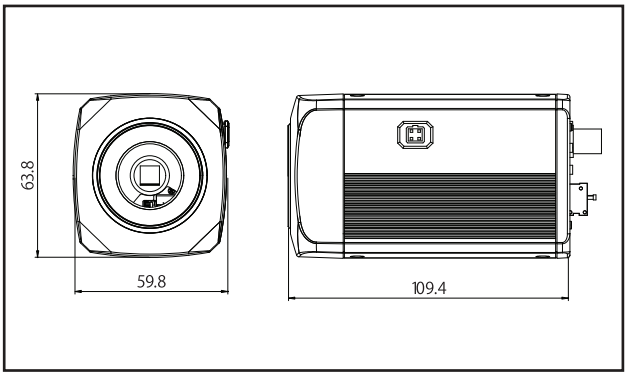
DIMENSIONS